NebGuide

University of Nebraska–Lincoln Extension, Institute of Agriculture and Natural Resources

Know how. Know now.

G1450
(Revised June 2014)

Manure Testing for Nutrient Content

Charles S. Wortmann, Nutrient Management Specialist; Charles A. Shapiro, Extension Soils Specialist; and Amy M. Schmidt, Livestock Bioenvironmental Engineer

This publication contains guidelines for determining manure nutrient content to improve crop and soil management. Manure testing combined with agronomically sound nutrient management and uniform application optimizes manure nutrient use while protecting water resources.

Manure and Soil Fertility Management

Animal manure has long been recognized as a source of nutrients for crop growth. When substituting manure for chemical fertilizers, farmers need to know the amounts of nutrients supplied to crops in the manure to properly adjust commercial fertilizer rates to meet crop needs while minimizing contamination of water supplies through leaching or runoff.

Typical values for the nutrient content of different animal manures are available in other extension publications, but actual nutrient values can differ significantly from farm to farm due to variations in manure storage and handling conditions, livestock type and age, ration formulation, and other management practices. Weather conditions and variations in management practices can cause manure nutrient contents to vary from month to month and from year to year on the same farm. To determine the nutrient content of manure, submit samples for analysis to one of the laboratories serving Nebraska livestock producers *(see Page 4)*.

Sampling Manure for Nutrient Analysis

If manure is tested before land application, the results can be used to adjust application rates. This may not be practical, however, and livestock feeding operations that are consistent in their feeding and manure management practices can determine application rates based on the average results of past manure analyses. Samples collected at the time of application have several advantages: The manure is mixed and similar to what is being applied; storage and handling losses do not need to be estimated; analysis results can be used to determine if additional nitrogen or other nutrients will be needed; and current analysis records are valuable for maintaining records of manure application.

The manure sample must be properly collected and handled to ensure reliable results. As explained in the following subsection, samples need to be composed of several subsamples for various types of manure to represent the available nutrients. The minimum numbers of subsamples suggested in this document are based upon generating a reliable estimate of manure nitrogen availability.

Figure 1. A soil probe can help provide a representative sample.

Solid and Semisolid Manure

Manure with greater than 20 percent dry matter is considered solid manure while manure with 10-20 percent dry matter is considered semisolid. While a spade can be used to sample a manure pile, more representative samples can be obtained using an auger or soil probe, which can reach deep into a manure pile *(Figures 1* and *2)*.

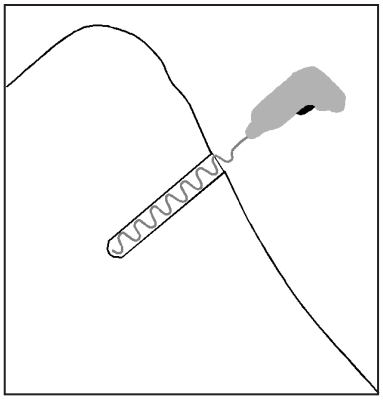

Figure 2. Using an auger bit to sample a manure pile.

Compared to sampling in open lots or from manure piles, sampling during or after loading the manure spreader is preferred because manure is mixed during loading and a more representative sample is obtained. When sampling during manure loading, a few handfuls — or "grab samples" — of manure should be collected from each spreader load and placed in a clean plastic bucket. The samples should then be thoroughly mixed and a single sample collected from the bucket for analysis. If several spreader loads of manure are being hauled, grab samples should be collected from at least 10 spreader loads to form a composite sample.

Manure can be sampled from open lots by scraping together manure in at least 20 areas of the feedlot and putting grab samples into a 5-gallon plastic bucket. The collection points should be representative of the entire feedlot area from which manure will be removed for spreading. Wet areas near water-

Figure 3. Place solid manure samples in a resealable freezer bag.

Subsampling and Packaging Solid Manure Samples

During sampling, put the manure in a five-gallon bucket and break up the lumps *(Figure 3)*. Mix manure well and subsample enough to fill a resealable, quart-sized freezer bag. Squeeze the bag to remove excess air and seal. Put the bag into a second resealable bag to further ensure against leakage. Refrigerate if the sample cannot be sent to the laboratory immediately. Freeze the sample if delivery will be delayed by several days.

ing points may have a different analysis than manure scraped from mounds. Carefully consider where to sample to obtain a sample that represents the manure that will be land applied. Avoid getting hay or other feedstuffs in the sample.

Manure that is stacked can be sampled by following a few simple rules: The surface crust of the pile should not be included. Rather, begin sampling at least 6 inches below the pile surface. Grab samples should be taken from at least 15 locations in a manure stack, including from the center of the stack. Recent research indicates that taking 30 samples minimizes error.

Solid manure can also be collected during application by spreading a plastic sheet or tarp measuring at least 4 feet by 4 feet in the path of the applicator. After the spreader passes, the manure on the tarp should be weighed. Manure should be gathered in this way five to six times during application, mixed thoroughly, and subsampled. An advantage of this method is that the manure spreader can be calibrated simultaneously. The number of pounds of manure collected on a tarp of 22 square feet — 5.5 feet by 4 feet — equals the number of tons per acre. If a differently sized tarp is used, the application rate can be calculated as shown:

$$\textit{Application Rate}\left(\frac{\textit{tons}}{\textit{acre}}\right) = \frac{\textit{lb of manure}}{\textit{area of tarp (ft}^2\textit{)}} \times 21.78$$

Slurry and Liquid Manure

Manure having 4 to 10 percent dry matter is considered slurry, while liquid manure has less than 4 percent dry matter by weight. Because these types of manure tend to contain a variety of suspended and settleable solids, causing the manure to become stratified, sampling during pumping is recommended to obtain a representative sample. The concentration of phosphorus can be two to eight times greater at a 14-foot depth compared to a 2-foot depth. Nitrogen concentration can be twice as high at the 14-foot depth as near the surface. Therefore, reliability of slurry or liquid manure analysis results is best with agitation.

Figure 4. Liquid out of pump.

Good mixing of manure in a storage facility may require two to four hours of agitation before manure removal and continued mixing during the emptying process.

Collect a sample in a clean container from the pump during loading, or when pumping to an irrigation system or an umbilical cord applicator *(Figure 4)*. Samples can be taken from the unloading port of a tank spreader immediately after loading. Do this for several loads or several times during pumping to ensure a representative sample. Be sure the sampling port does not have an accumulation of solids.

If sampling directly from the storage facility is the only option, a tool made with PVC pipe may be useful for vertical sampling (*Figure 5)*. Again, it is ideal to collect the sample during or immediately following agitation. If a storage structure is sampled without agitation, it is especially important to obtain manure from the various depths due to stratification of the nutrients. A good estimate of manure nitrogen content of liquid manure sampled from unagitated storage requires at least 20 subsamples.

It is hazardous to sample slurry and liquid manures from inside a building storage (e.g., a deep pit under a slatted floor) due to the possibility of falling into the storage unit or breathing potentially lethal gases emitted during agitation of manure in enclosed pits or tanks. To protect animals and workers, all people and animals should be removed from the building during agitation, and all available ventilation options should be implemented, including opening curtains, running ventilation fans, and opening other vents. Take additional precautions: Wear gloves and have someone else present when you are in the building. ***Never enter confined manure storage areas without the appropriate safety equipment.***

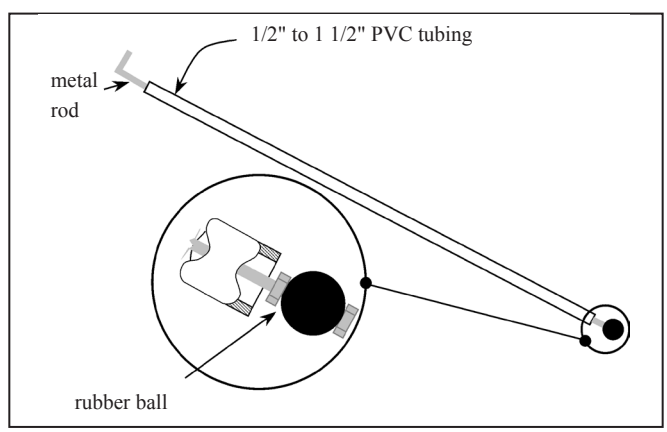

Figure 5. PVC pipe sampler.

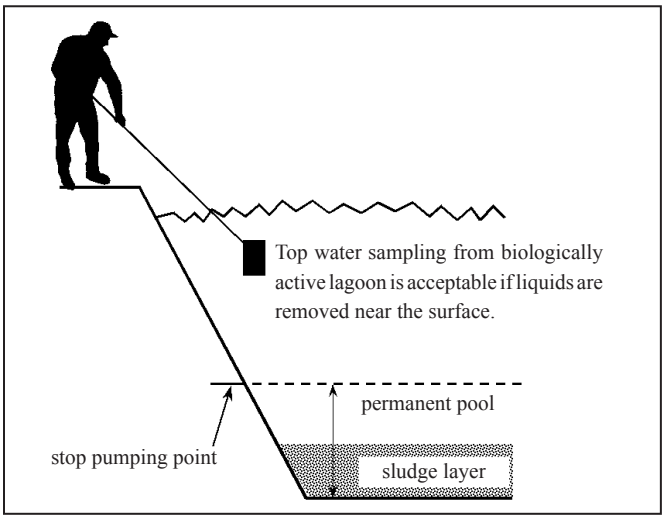

Figure 6. Sampling from a lagoon.

Anaerobic Lagoons

Anaerobic lagoons are not usually agitated before manure removal. When sampled from May through November, the top layer from the surface to the interface with the sludge layer (i.e., effluent) is fairly uniform in nutrient concentration due to biological mixing. If anaerobic lagoons are pumped from near the surface, a representative effluent sample can be obtained by taking several surface samples with a small container attached to a 10-foot pole *(Figure 6)*. Floating solids on the lagoon surface and near the edge of the lagoon should be avoided as these can misrepresent actual nutrient content of the liquid.

Liquid manure applied through sprinkler irrigation systems also can be collected during application. Place collection pans or buckets at eight or more points throughout the application area to collect the manure. This accounts for any dilution if water is added to the manure and for ammonium losses during application; however, ammonium losses from the soil surface will not be accounted for by collecting samples after sprinkler irrigation.

Labeling, Shipping, and Analysis of Samples

Label the sample container for identification, including your name and address, your sample identification, the date of sampling, manure type, and the sample location. Provide additional information with the sample as requested by the laboratory. A link to a generic manure sample submission form is included at the end of this NebGuide. It includes information useful in making a manure application recommendation. Each laboratory has its own sample forms, so check with the lab to determine what information will be required.

If it will take more than a few hours to deliver the sample, it should be refrigerated or frozen to prevent nutrient losses and transformations. Keep in mind that freezing samples will cause them to expand so containers should not be filled completely to the top. If kept at room temperature, the manure may eventually ferment or decompose, with significant breakdown of the solids. Avoid leaving samples in a vehicle where they can become very warm.

If the sample will be shipped, keep the sample chilled during shipping by packing it in an insulated container or wrapping it in layers of newspaper. Cold packs may be added. Avoid weekend delays in shipping by sending it early in the week.

Laboratory Analysis

Tests Desired

The tests most frequently needed to optimize nutrient management are total and ammonium nitrogen, phosphorus, potassium, pH, soluble salts, sodium, and dry matter content.

Nitrogen. Manure contains both organic and inorganic forms of nitrogen. Ammonium-N is the primary inorganic form in manure and is readily available to crops. Nitrate-N is usually too small to affect management decisions, unless the manure is composted. Organic nitrogen is determined as the difference between total nitrogen and inorganic nitrogen. Organic nitrogen becomes available to plants as manure decomposes, with 20 to 50 percent of organic nitrogen available to the first crop after application. Much of the remaining organic nitrogen becomes available in subsequent years.

Phosphorus. Most manure phosphorus (about 75 percent) is in inorganic forms. Phosphorus analysis allows calculation

Figure 7. Put liquid manure samples in plastic, screw-topped containers.

Figure 8. Seal liquid manure samples carefully.

Subsampling and Packaging Liquid of Slurry Manure Samples

During sampling, collect the manure in a five-gallon bucket. Mix well and remove a subsample while the sample is still swirling. Put the subsample in a pint-sized plastic, screw-topped container that can be tightly closed *(Figure 7)*. Never use glass containers. Fill the bottle to 1-2 inches from the top and seal the lid with tape to ensure that it does not become unscrewed *(Figure 8)*. Put the sample in a resealable plastic bag. Chill the sample and send or deliver to the laboratory within a few days. Freeze the sample if delivery will be delayed.

of the most economical manure rates while avoiding overapplication of phosphorus, which can have severe consequences to surface waters.

Other tests. Tests for potassium, sulfur, zinc, and other nutrients may be useful. When manure is applied to meet nitrogen or phosphorus needs, other nutrients are generally adequate for soils in Nebraska. If liquid manure is applied to a crop through sprinkler irrigation, testing for soluble salts, or electrical conductivity (EC), helps predict if there might be potential for leaf burning (See *http://www.ianrpubs.unl.edu/sendIt/ec778.pdf*). Information on soluble salt content or EC is useful in managing anaerobic lagoons. When the surface of a lagoon has a purple color, the microbial processes are functioning well and the odor is less.

Report Information

Units. Specify if the results should be reported in pounds of nutrient per ton (spreader), per 1,000 gallons (tanks or umbilical cord), or per acre-inch (irrigation). This depends on your application method. Phosphorus and potassium should be reported in the oxide form (P_2O_5 and K_2O) so their fertilizer value is easy to calculate.

Moisture. Reporting the results on an "as is" or "wet" basis allows a producer to determine the nutrient application rate without adjusting for water content.

Nutrient availability. Laboratories can estimate the amount of nutrients available in the first year, and the amount of manure nitrogen that will be available during following years. This is especially important for solid manures.

Application basis. Manure is often applied on a "nitrogen basis" to supply enough nitrogen to meet crop needs. When soil test phosphorus is excessive, manure may be applied on a "phosphorus basis" that is at a rate sufficient to match phosphorus removal by the crop.

Land Application and Rate Determination

Some manure nutrients will not be available to the crop in the season following application. The laboratory report should give an estimate of nutrients available to the first crop following manure application as well as total nutrient content. For example, 20-50 percent of the organic nitrogen should be available to the first crop, depending on the manure type; much of the remaining organic nitrogen becomes available in following years. The report also may provide an estimate of ammonium-nitrogen losses, which will vary with application and incorporation practices.

Nebraska Laboratories Providing Manure Testing Services

Midwest Laboratories	Olsen's Agricultural Laboratory	Platte Valley Laboratories	Servi-Tech Laboratories	Ward Laboratories
13611 "B" St.	210 E. 1st St., P.O. Box 370	914 Hwy. 30, P.O. Box 807	1602 Park West Dr., P.O. Box 169	4007 Cherry Ave., P.O. Box 788
Omaha, NE 68144	McCook, NE 69001	Gibbon, NE 68840	Hastings, NE 68902	Kearney, NE 68848-0788
402-334-7770	308-345-3670	308-468-5975	402-463-3522	308-234-2418
https://www.midwestlabs.com/	*http://www.olsenlab.com/*	*http://www.soillab.com/*	800-557-7509	800-887-7645
			http://www.servitechlabs.com	*http://www.wardlab.com/*

LINK **Generic Manure Sample Submission Form**

This publication has been peer reviewed.

Disclaimer

Reference to commercial products or trade names is made with the understanding that no discrimination is intended of those not mentioned and no endorsement by University of Nebraska–Lincoln Extension is implied for those mentioned.

UNL Extension publications are available online at *http://extension.unl.edu/publications*.

Manure-related extension publications are available online at *http://manure.unl.edu.*

Index: Waste Management
Waste Resource Management
2002-2009, Revised June 2014

Extension is a Division of the Institute of Agriculture and Natural Resources at the University of Nebraska–Lincoln cooperating with the Counties and the United States Department of Agriculture.

University of Nebraska–Lincoln Extension educational programs abide with the nondiscrimination policies of the University of Nebraska–Lincoln and the United States Department of Agriculture.

© 2002-2009, 2014 The Board of Regents of the University of Nebraska on behalf of the University of Nebraska–Lincoln Extension. All rights reserved.